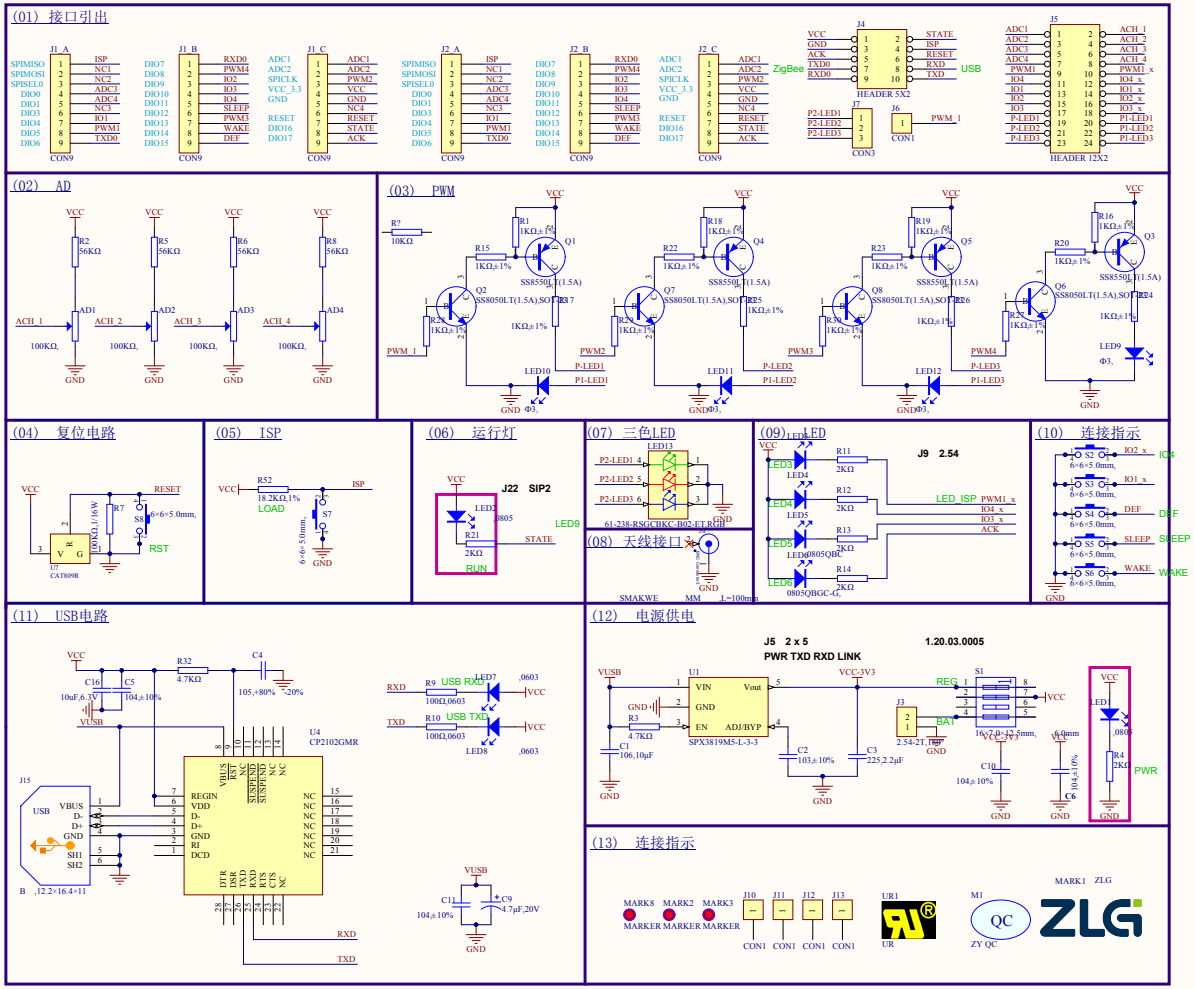


| | | |
|---|---|---|
| Title | | |
| Size A2 | Number | Revision |
| Date: 2016/1/19 | Sheet of | |
| File: E:\ \AW516x Demo Board.SchDoc | Drawn By: | |